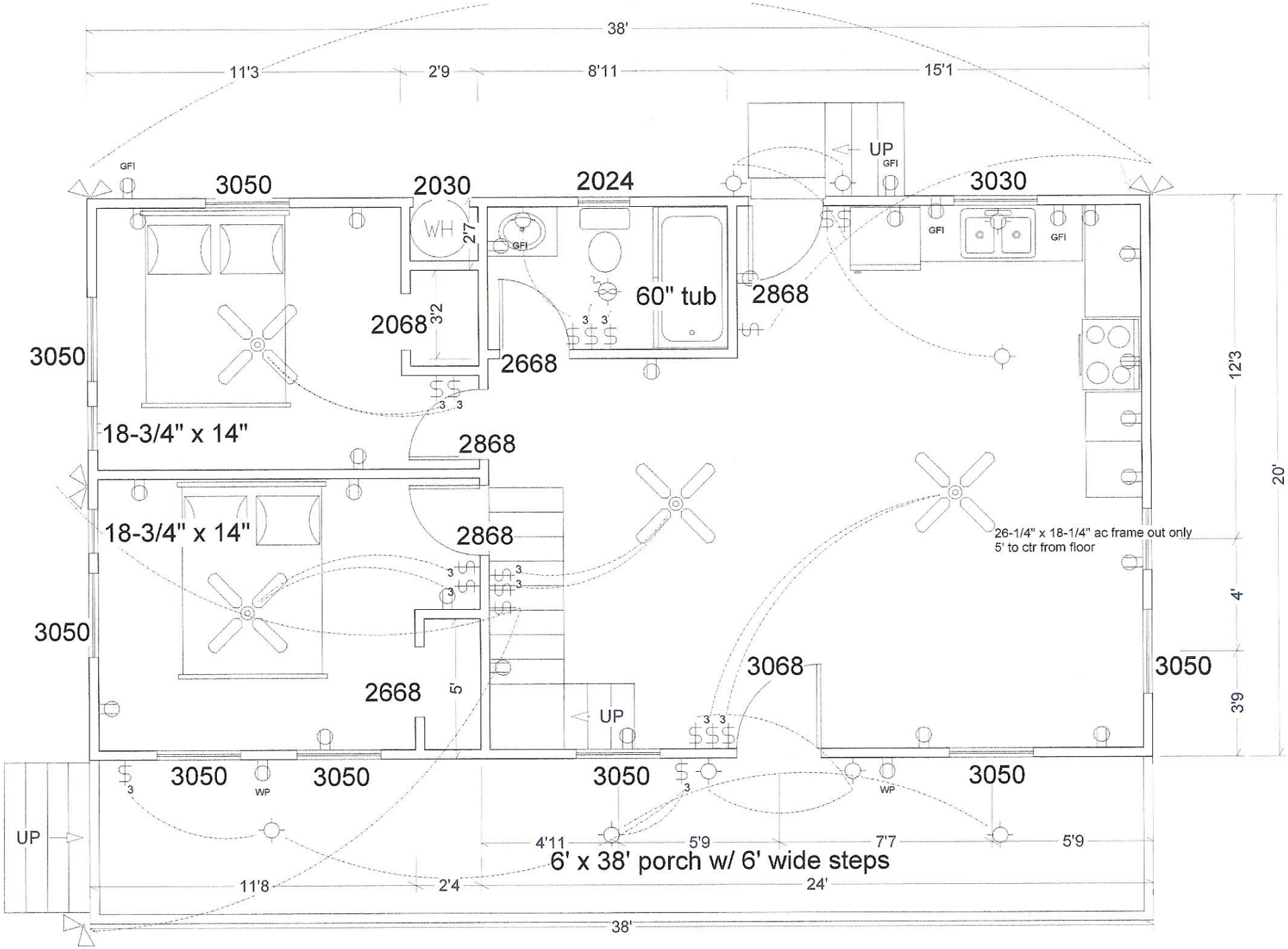


LIVING AREA
981 sq ft